DOMINANT™
Opto Technologies
Innovating Illumination

DATASHEET:

Power Right Angle DomiLED

AlInGaP : D3x-HJS

Power Right Angle

Power Right Angle DomiLED features a package with excellent luminous efficiency in high optimization in its optical design and provides stable SMT process to avoid topping issue.



Features:



- > Super high brightness surface mount LED.
- > 120° viewing angle.
- > Compact package outline (LxWxH) of 4.0 x 4.3 x 2.75 mm.
- > Qualified according to JEDEC moisture sensitivity Level 2.
- > Low thermal resistance.
- > Superior corrosion robustness.
- > Compatible to IR reflow soldering.
- > Compliance to automotive standard; AEC-Q102.
- > Environmental friendly; RoHS compliance.
- > Desired for sideway illumination.



Applications:

- > Automotive:

Interior applications, eg: switches, telematics, climate control system, dashboard, etc.
Exterior applications, eg: Rear Combination Lamp (RCL),
Center High Mounted Stop Lamp(CHMSL).

All rights reserved. Product specifications are subject to change without notice.

Electrical Characteristics at Tj=25˚C

Part Number	Color	Viewing Angle˚	Luminous Flux @ 30mA (lm) *Appx. 1.2*		
			Min.	Typ.	Max.
D3S-HJS-D3F2-3	Super Red, 635nm	120	1.89	2.47	3.22
D3S-HJS-EF3-2	Super Red, 630nm	120	2.16	2.82	3.68
D3A-HJS-GH3-4	Amber, 625nm	120	3.68	4.90	6.30
D3A-HJS-G3J2-2	Amber, 617nm	120	4.20	5.50	7.15

Electrical Characteristics at Tj=25˚C

Part Number	Vf @ If = 30mA *Appx. 3.1*			V_r @ I_r = 10uA *Appx. 6.1*
	Min. (V)	Typ. (V)	Max. (V)	Min. (V)
D3x-HJS	1.90	2.20	2.50	12

Absolute Maximum Ratings

	Maximum Value	Unit
DC forward current	70	mA
Peak pulse current; (Ts=55 ˚C, tp ≤ 100µs, Duty cycle = 0.03)	140	mA
Reverse voltage; Ir_{max} = 10µA *Appx. 6.1*	12	V
ESD threshold (HBM)	2	KV
LED junction temperature	125	˚C
Operating temperature	-40 … +115	˚C
Storage temperature	-40 … +125	˚C
Thermal resistance (Rated current = 30mA, Ts=25˚C) - Real Thermal Resistance Junction / solder point, $R_{th\ JS\ real}$ - Electrical Thermal Resistance Junction / solder point, $R_{th\ JS\ el}$	 100 85	 K/W K/W

Wavelength Grouping at Tj= 25˚C

Color	Group	Wavelength distribution (nm) *Appx. 2.2*
D3S, Super Red	Full	627 - 637
	W	627 - 630
	X	630 - 634
	Y	634 - 637
D3A, Amber	Full	612 - 627
	W	612 - 616
	X	616 - 620
	Y	620 - 624
	Z	624 - 627

Luminous Flux Group at Tj=25˚C

Brightness Group	Luminous Flux *Appx. 1.2* (lm)
D3	1.89 ... 2.16
E2	2.16 ... 2.47
E3	2.47 ... 2.82
F2	2.82 ... 3.22
F3	3.22 ... 3.68
G2	3.68 ... 4.20
G3	4.20 ... 4.90
H2	4.90 ... 5.50
H3	5.50 ... 6.30
J2	6.30 ... 7.15

Vf Bining (Optional)

Vf Bin @ 30 mA	Forward Voltage (V) *Appx. 4.1*
V43	1.90 ... 2.05
V44	2.05 ... 2.20
V45	2.20 ... 2.35
V46	2.35 ... 2.50

Please consult sales and marketing for special part number to incorporate Vf bining.

Relative Luminous Flux Vs Forward Current

Appx. 4.1

$\Phi_V/\Phi_V(30mA) = f(I_F)$; $T_j = 25°C$

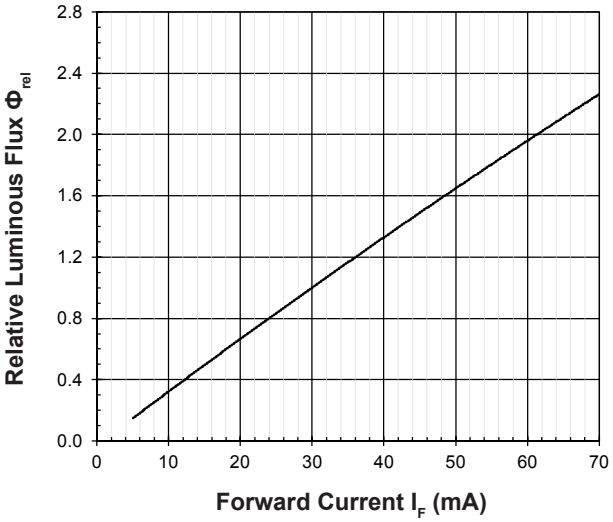

Forward Current Vs Forward Voltage

Appx. 4.1

$I_F = f(V_F)$; $T_j = 25°C$

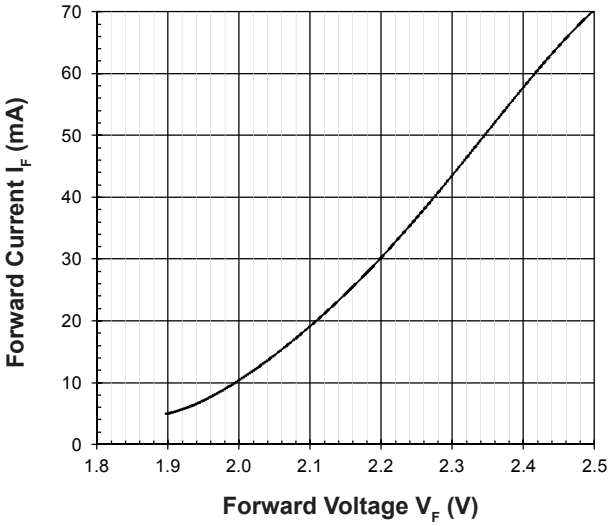

Maximum Current Vs Temperature

$I_F = f(T)$

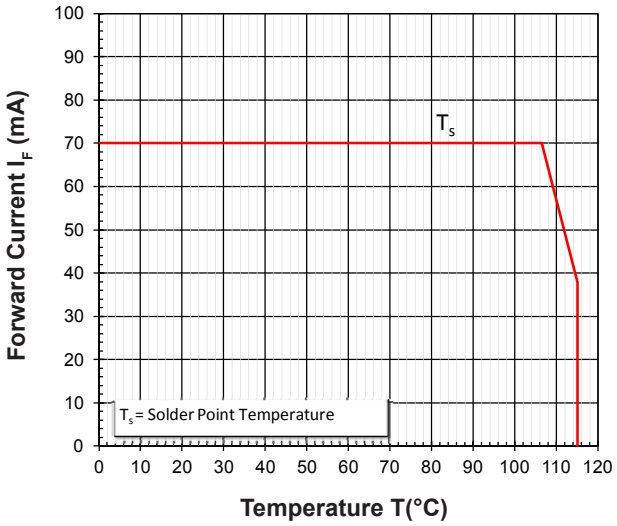

Relative Spectral Emission

Appx. 4.1

$\Phi_{rel} = f(\lambda)$; $T_j = 25°C$; $I_F = 30mA$

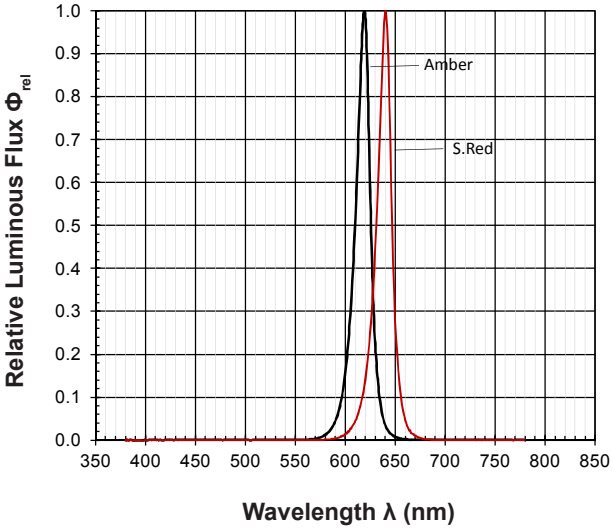

Allowable Forward Current Vs Duty Ratio

($T_s = 55°C$; $t_p \leq 100\mu s$)



Radiation Pattern

Appx. 4.1

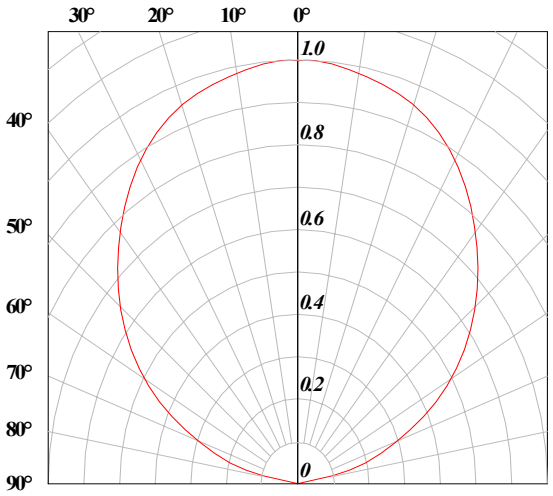

Forward Voltage Vs Junction Temperature *Appx. 4.1*

$\Delta V_F = V_F - V_F(25°C) = f(T_j)$; I_F =30mA

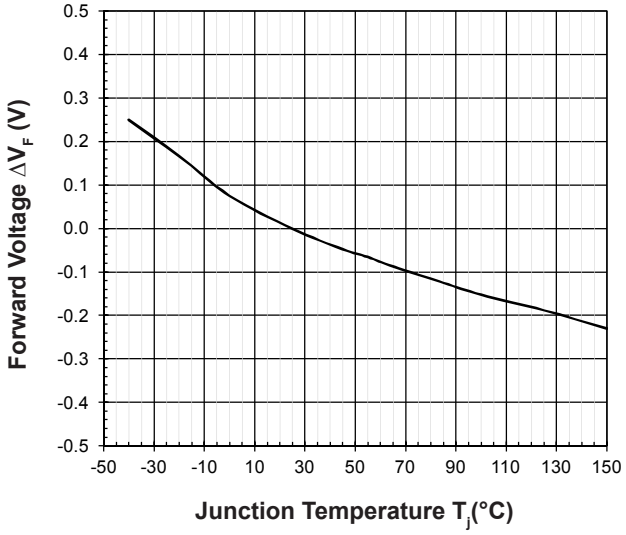

Relative Luminious Flux Vs Junction Temperature *Appx. 4.1*

$\Phi V/\Phi V(25°C) = f(T_j)$; I_F = 30mA

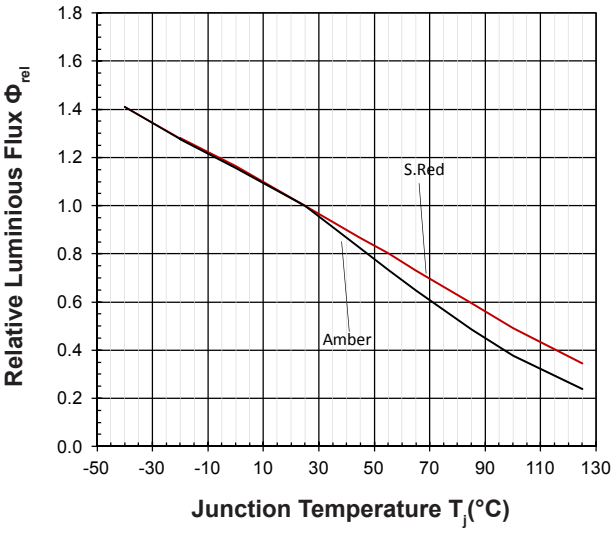

Wavelength Vs Junction Temperature *Appx. 4.1*

$\Delta\lambda dom = \lambda dom - \lambda dom\ (25°C) = f(T_j)$; I_F = 30mA

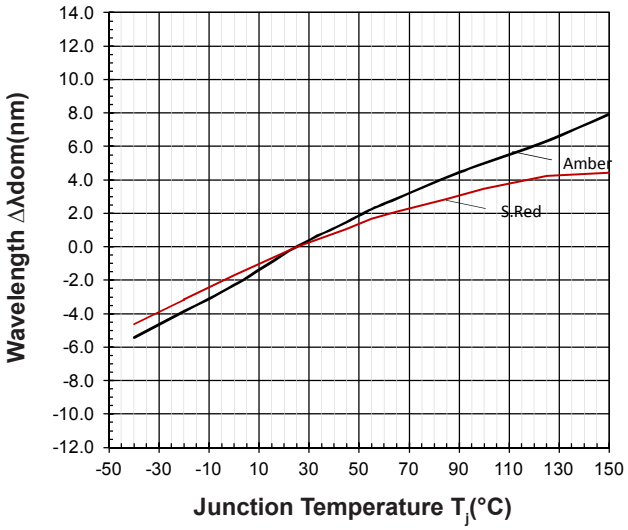

Power Right Angle DomiLED AlInGaP: D3x-HJS Package Outlines *Appx. 5.1*

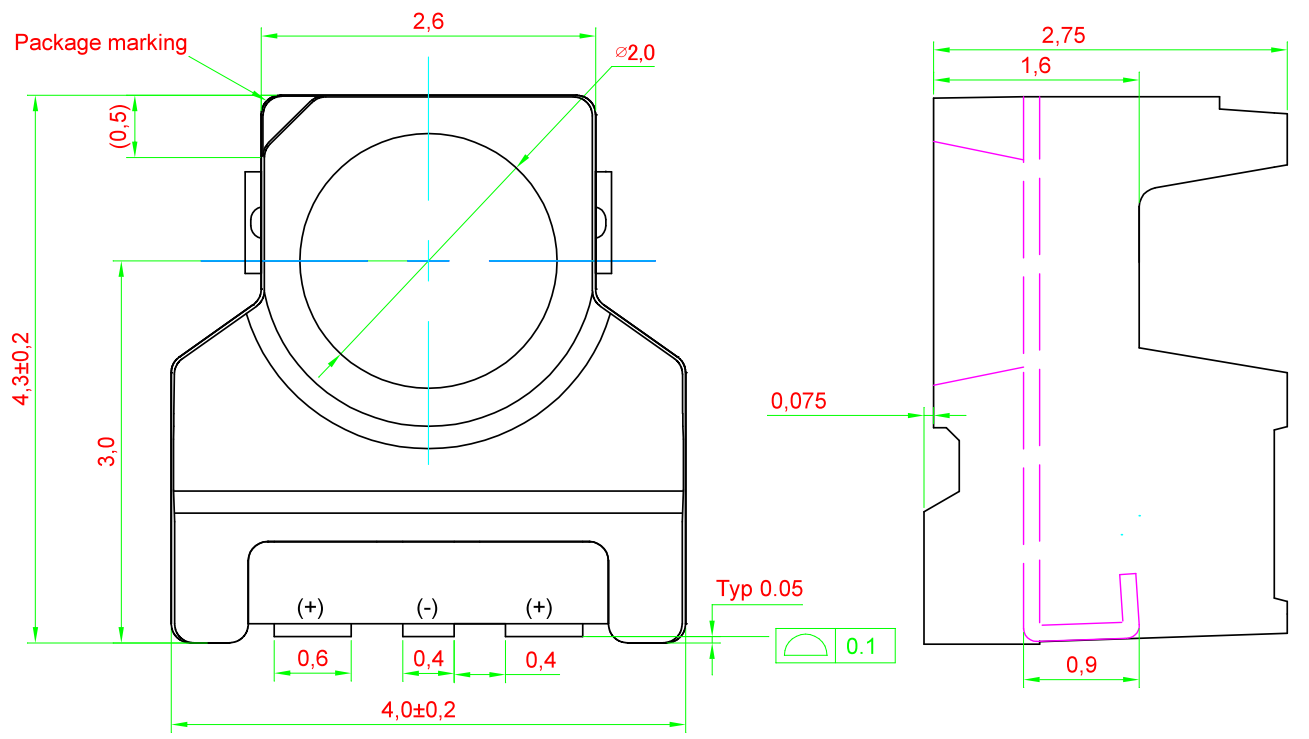

Note : Primary thermal path is through Anode lead of LED package
General Tolerances ± 0.10

Recommended Solder Pad *Appx. 5.1*

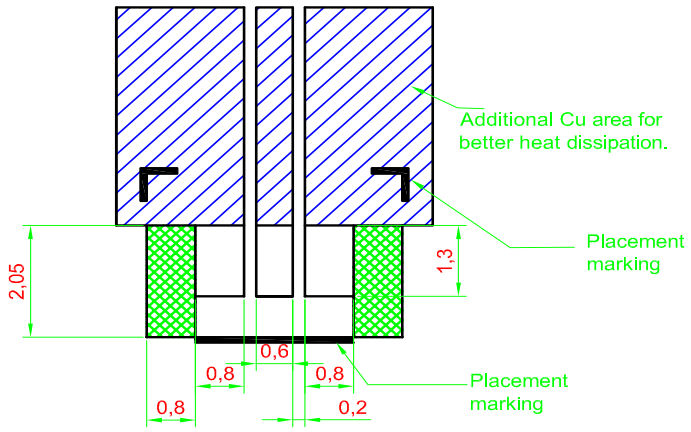

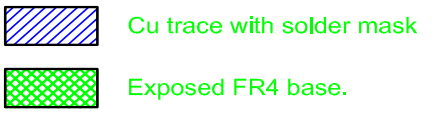

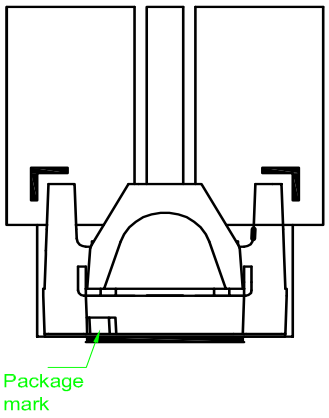

Taping and orientation *Appx. 5.1*

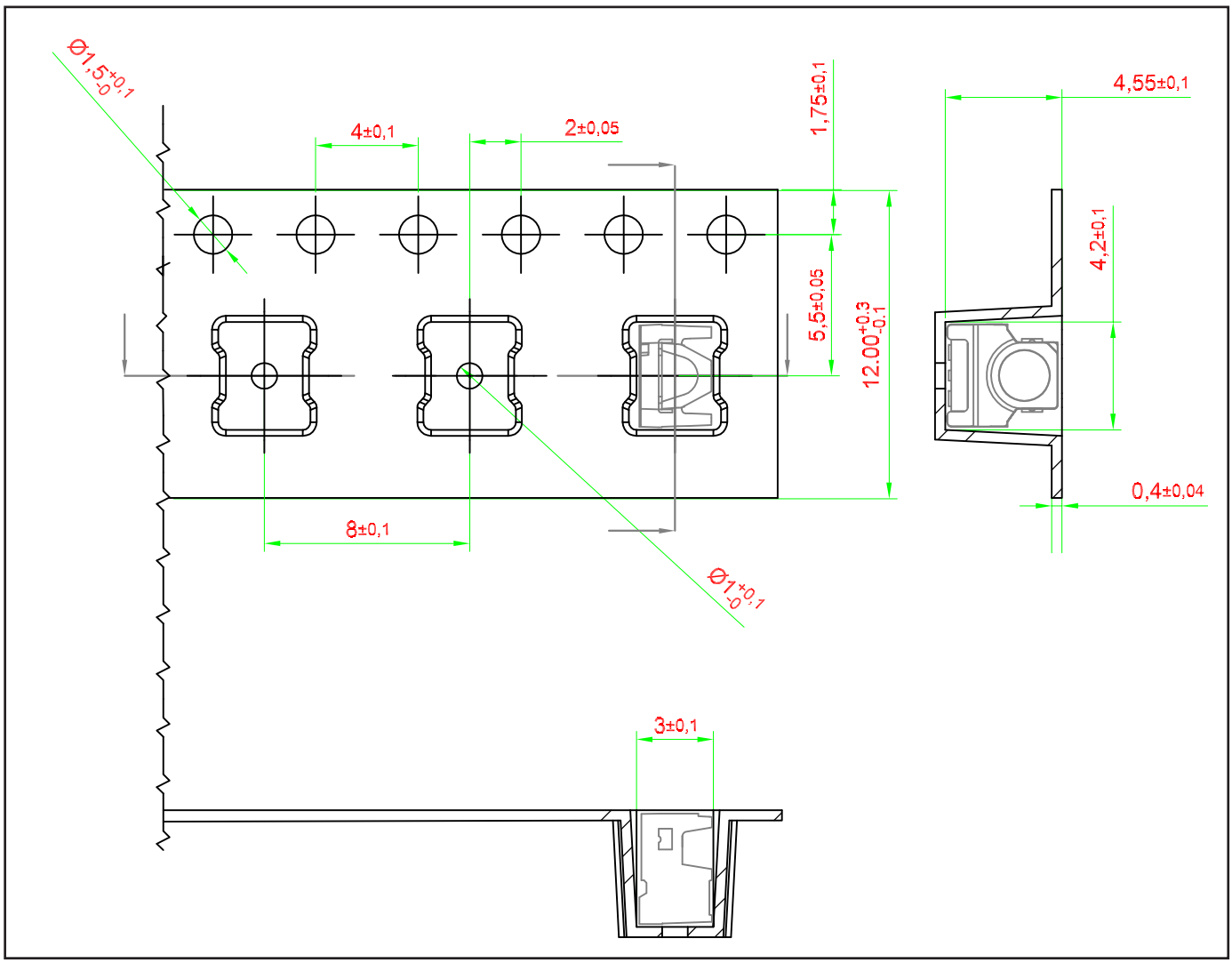

Packaging Specification

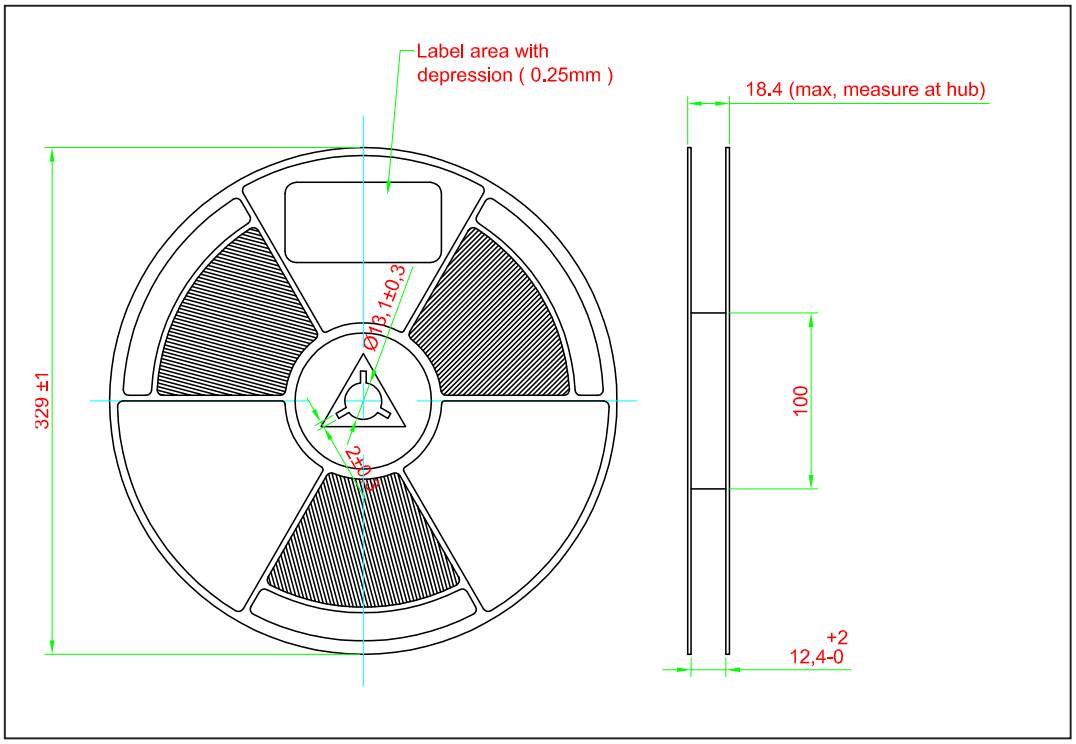

	Reel Diameter (mm)	Quantity (pcs)	*Ordering Number
Standard Packing	329	1500	D3x-HJS-xxx-x

Notes:

* For ordering purpose only. Please consult sales and marketing for details.

Packaging Specification

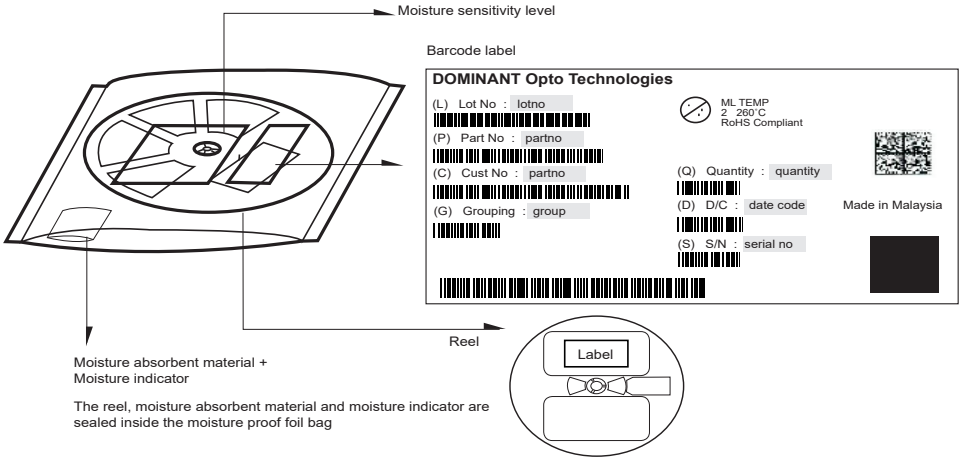

Quantity per bag (pcs)	Average 1pc Power Right Angle DomiLED (g)	1 completed bag (g)
1500	0.041	700 ± 10

Recommended Pb-free Soldering Profile

Product complies to MSL Level 2 acc. to JEDEC J-STD-020E

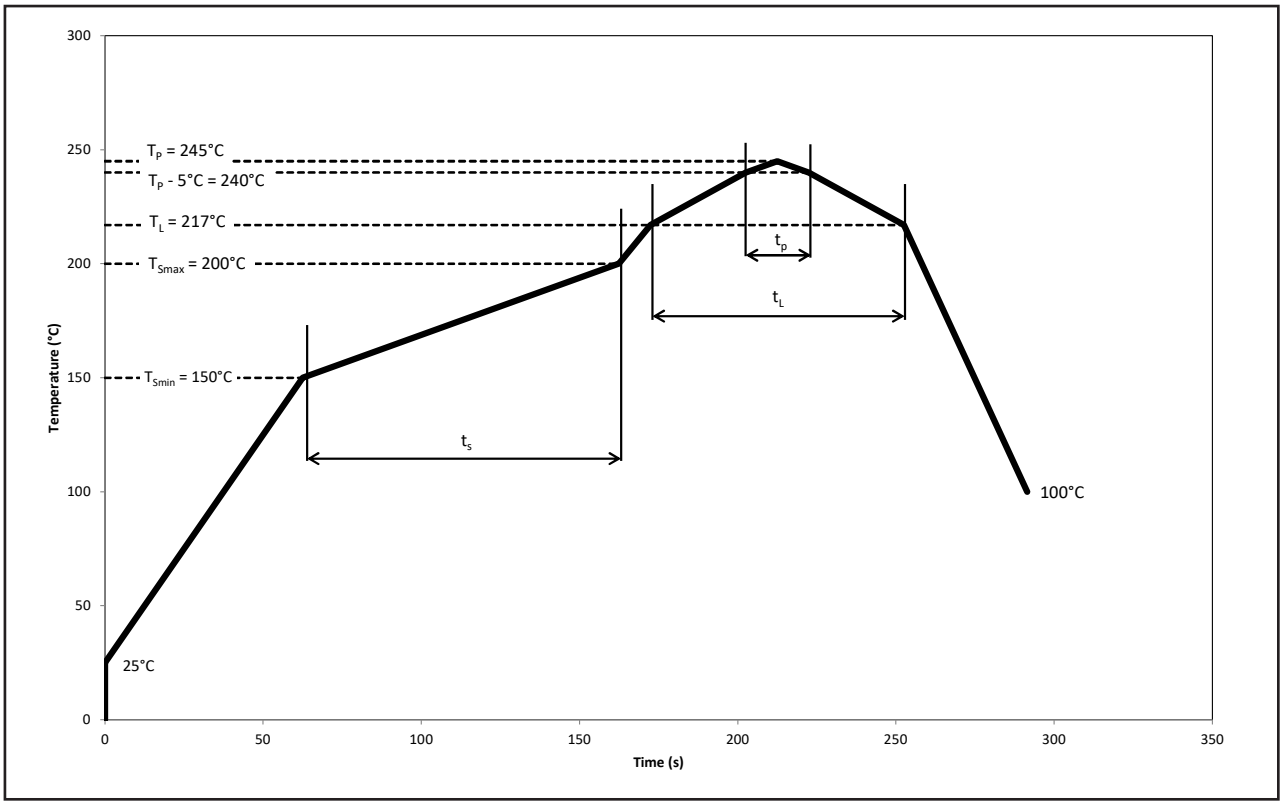

Profile Feature	Symbol	Pb-Free Assembly			Unit
		Min.	Recommended	Max.	
Ramp-up rate to preheat 25°C to T_{smin}	-	-	2	3	°C/s
Time t_S T_{smin} to T_{smax}	t_S	60	100	120	s
Ramp-up rate to peak T_L to T_P	-	-	2	3	°C/s
Liquidous temperature	T_L	-	217	-	°C
Time above liquidous temperature	t_L	60	80	150	s
Peak temperature	T_p	-	245	260	°C
Time within 5°C of the specified peak temperature T_P - 5°C	t_p	10	20	30	s
Ramp-down rate T_P to 100°C	-	-	3	6	°C/s
Time 25°C to T_P	-	-	-	480	s

Appendix

1) Brightness:

1.1 Luminous intensity is measured at current pulse 25 ms(typ) with an internal reproducibility of ± 8 % and an expanded uncertainty of ± 11 % (according to GUM with a coverage factor of k=3).

1.2 Luminous flux is measured at current pulse 25 ms(typ) with an internal reproducibility of ± 8 % and an expanded uncertainty of ± 11 % (according to GUM with a coverage factor of k=3).

1.3 Radiant intensity is measured at current pulse 25 ms(typ) with an internal reproducibility of ± 8 % and an expanded uncertainty of ± 11 % (according to GUM with a coverage factor of k=3).

1.4 Radiant flux is measured at current pulse 25 ms(typ) with an internal reproducibility of ± 8 % and an expanded uncertainty of ± 11 % (according to GUM with a coverage factor of k=3).

2) Color:

2.1 Chromaticity coordinate groups are measured at current pulse 25 ms(typ) with an internal reproducibility of ± 0.005 and an expanded uncertainty of ± 0.01 (accordingly to GUM with a coverage factor of k=3).

2.2 Dominant wavelength is measured at current pulse 25 ms(typ) with an internal reproducibility of ± 0.5nm and an expanded uncertainty of ± 1nm (accordingly to GUM with a coverage factor of k=3).

3) Voltage:

3.1 Forward Voltage, Vf is measured when a current pulse of 8 ms(typ) with an internal reproducibility of ± 0.05V and an expanded uncertainty of ± 0.1V (accordingly to GUM with a coverage factor of k=3).

4) Typical Values:

4.1 Due to the specific conditions of semiconductor devices' manufacturing processes, the provided typical data and calculated correlations of technical parameters should only be considered as statistical values. It is important to note that the actual parameters of individual devices may deviate from these typical data, calculated correlations or the typical characteristic line. Dominant reserves the right to update this typical data without prior notice, particularly in response to technical enhancements.

5) Tolerance of Measure

5.1 Unless otherwise noted in drawing, tolerances are specified with ± 0.1 and dimension are specific in mm.

6) Reverse Voltage:

6.1 Not designed for reverse operation. Continuous reverse voltage can cause migration and LED damage.

7) Corrosion Robustness:

7.1 Test conditions: 40 °C / 90 % rh / 15 ppm H_2S / 336 h.

= Stricter than IEC 60068-2-43 (H_2S) [25 °C / 75% rh / 10 ppm H_2S / 21 days].

Revision History

Page	Subjects	Date of Modification
-	Initial Release	16 Nov 2020
11	Update Packaging Specification	29 Feb 2024
7, 8	Update Package Outline Update Recommendation Solder Pad	19 Mar 2026

NOTE

All the information contained in this document is considered to be reliable at the time of publishing. However, DOMINANT Opto Technologies does not assume any liability arising out of the application or use of any product described herein.

DOMINANT Opto Technologies reserves the right to make changes to any products in order to improve reliability, function or design.

DOMINANT Opto Technologies products are not authorized for use as critical components in life support devices or systems without the express written approval from the Managing Director of DOMINANT Opto Technologies.

Dispose of product is in accordance with local, regional, national and international regulations.

About Us

DOMINANT Opto Technologies is a dynamic company that is amongst the world's leading automotive LED manufacturers. With an extensive industry experience and relentless pursuit of innovation, DOMINANT's state-of-art manufacturing and development capabilities have become a trusted and reliable brand across the globe. More information about DOMINANT Opto Technologies, an IATF 16949 and ISO 14001 certified company, can be found under http://www.dominant-semi.com.

Please contact us for more information:

DOMINANT Opto Technologies Sdn. Bhd.
Lot 6, Batu Berendam, FTZ Phase III, 75350 Melaka, Malaysia
Tel: (606) 283 3566 Fax: (606) 283 0566
E-mail: sales@dominant-semi.com